sedus

se:café bench

The perfect spot for communication or temporary retreat

The Sedus Smart Café stands for modern working environments that focus on social interaction, collaboration and individual working needs. se:café bench adds to this concept with its timeless elegance and high degree of functionality. The fully upholstered seat surface of the bench combined with its clear lines and a minimalist design create an atmosphere of comfort and cosiness that also meets professional requirements. With different heights and a wide variety of models, se:café bench adapts flexibly to a number of application areas – from work café to intermediate areas to lounges or informal meeting areas. Thanks to the deliberately open design without armrests, it offers maximum freedom of movement and supports a wide variety of sitting positions. Whether as a zoning element, safe haven or meeting point – se:café bench blends harmoniously into the Smart Café and can be perfectly combined with other Sedus products. It connects maximum seating comfort with a homely design, making it the ideal piece of furniture for inviting, inspiring work environments.

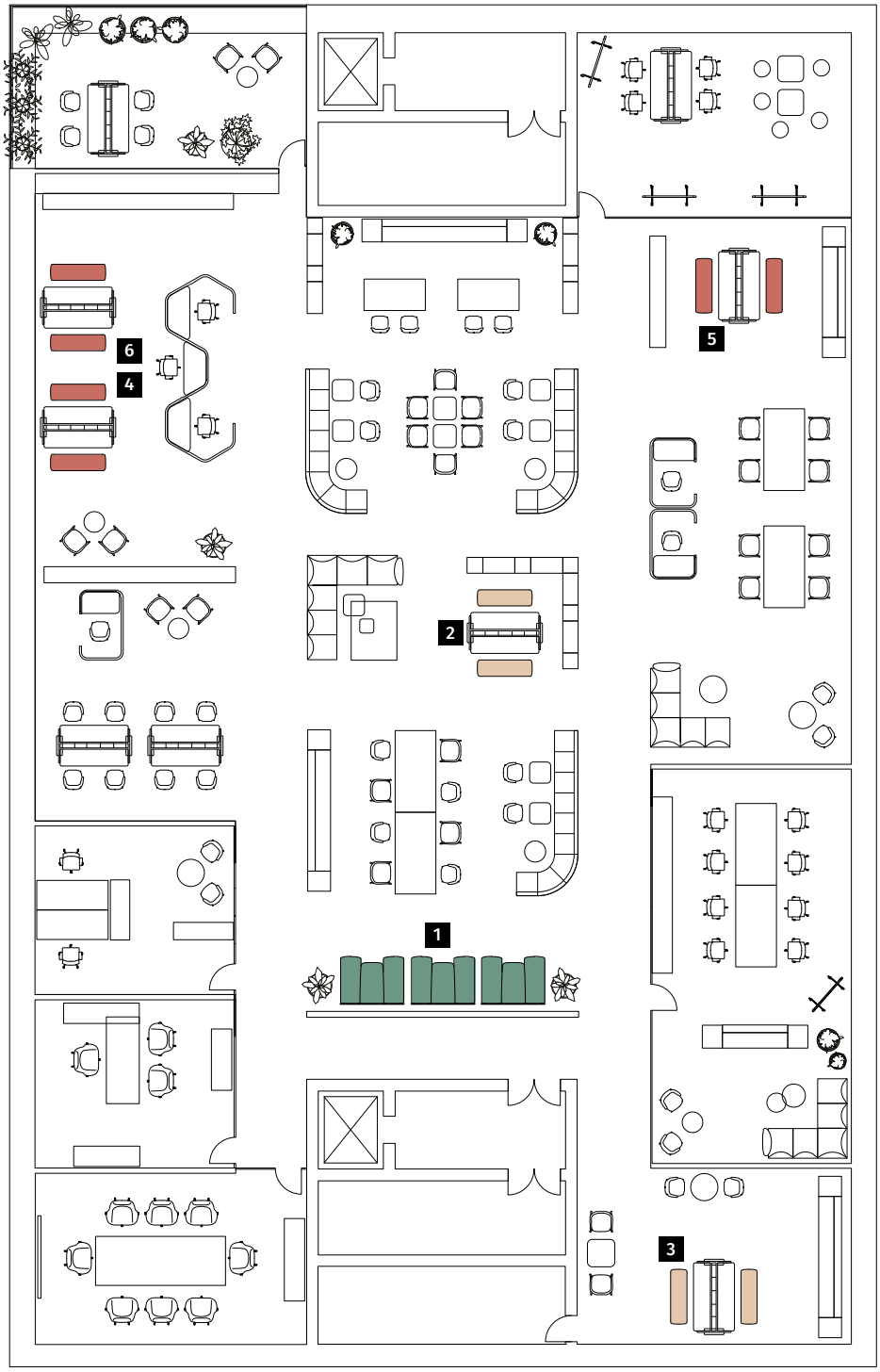

Application areas

1 Work Café

2 Canteen, bistro & cafeteria

3 Break areas

4 Hubs, central zones & intermediate areas

5 Informal meetings

6 Temporary workstations at the high desk

se:café bench

se:café high bench
se:café high bench is a fully upholstered high bench with backrest and footrest. Available in two seat heights and with two leg frame variants, it is perfect for informal meetings as well as for use at hub spots and in central zones.

se:café high diner
se:café high diner is a diner configuration consisting of two se:café high benches facing each other with foot rails, connecting privacy screens and an integrated table with electrical connection option. This makes it the perfect fit for a work café environment.

se:café bench
The fully upholstered se:café bench, without a backrest, is available with two base frame versions: wood or steel. The all-round decorative seam as a design element makes it an eye-catcher in break areas or intermediate areas.

se:café high bench

Fully upholstered high bench with backrest and foot rail

se:café high bench takes comfort and functionality to a new level. Equipped with a backrest and foot rail, it offers the ideal conditions for high-positioned common areas in a medium or high seat height. The design unites elegance and cosiness, while the sturdy construction guarantees safety and support. The bench is ideal for use at counter areas or as seating in modern work cafés and intermediate areas. Thanks to its fully upholstered design and high-quality materials, se:café high bench not only ensures a comfortable seating experience, but also enhances the room's overall ambience and design.

Advantages

- The diverse heights and model versions make the high bench both a meeting point for informal meetings and a favourite place for cosy break times.
- The bench impresses with its attractive appearance.
- The comfortable upholstery creates a cosy and welcoming feel.

Features

- The bench has a foot rail.
- The look is reminiscent of restaurant or café furniture (American diner).
- The seat width is 1400 mm.
- The model has a simple plug-in and screw system for mounting and linking individual parts.
- Clear, organic and flowing lines characterise se:café high bench.
- The high bench is supplied partially assembled in cardboard packaging.

Options/accessories

- Two base frame variants are available: wood and steel.
- The bench is available in two seat heights: 625 mm (studio) and 780 mm (bar) and the seat width is 1400 mm.
- With the high bench version, the two upholstery covers for the top seat surface and inside and outer backrest can be configured independently of each other.

Dimensions (all dimensions in mm)

studio (seat height: 625 mm)

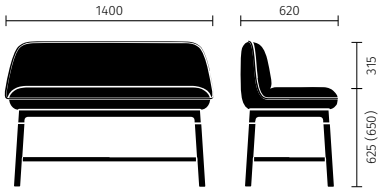

bar (seat height: 780 mm)

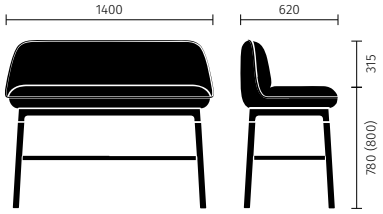

Colours

Upholstery covers Further options

Cream · Yellow green · Light blue · Mid blue · Yellow orange · Beige cognac · Brown-violet · Dark grey melange · Carbon · Pale grey

Solid wood frame

Beech natural · Beech black · Ash on natural oak, stained

Steel frame

Black · Clear white · Chromed · Fjord green · Cayenne red · Sand beige · Deep green · Bronze dark

---

More about se:café high bench

Website
CAD data

se:café high diner

Versatile diner configuration

The se:café high diner configuration consists of two opposing se:café high benches with foot rails, an integrated table and connecting privacy screens. This solution not only creates safe havens for group or individual work, but is also suitable as a zoning element in open-plan office environments. With two different seat heights, se:café high diner offers comfort and functionality in a compact space. The integrated electrical connection option supports the requirements of modern working environments, while the elegant design and variety of options ensure both visual appeal and flexible functionality.

Advantages

- se:café high diner impresses with its attractive appearance.
- The comfortable upholstery creates a cosy and welcoming feel.
- The configuration is suitable for many different applications.

Features

- The look is reminiscent of restaurant or café furniture (American diner).
- The diner configuration consists of two se:café high benches facing each other with foot rails, connecting privacy screens at the rear and an integrated table with electrical connection option.
- The configuration has a simple plug-in and screw system for mounting and linking individual parts.
- For the high diner configuration, the two upholstery covers for the top seat surface and inside and outer backrest can be configured independently of each other.
- The two fabric covers for the inside and outside of the screen can be configured independently of each other, including the all-round decorative seam.
- Clear, organic and flowing lines characterise the model.

Options/accessories

- Two base frame variants are available: wood and steel.
- se:café high diner is available in two seat heights: 625 mm (studio) and 780 mm (bar) and the seat width is 1400 mm.
- The screen attached to the back serves as a unifying element and can be attached or removed at a later date.
- Electrification options are available for the diner.
- It is possible to replace electrical components at a later date.
- The Sedus fabric collections, as well as leather and imitation leather, are available. Note: Colour combinations are possible within a fabric collection. Leather and imitation leather can be combined with each other and with all fabric collections.

Dimensions (all dimensions in mm)

studio (seat height: 625 mm)

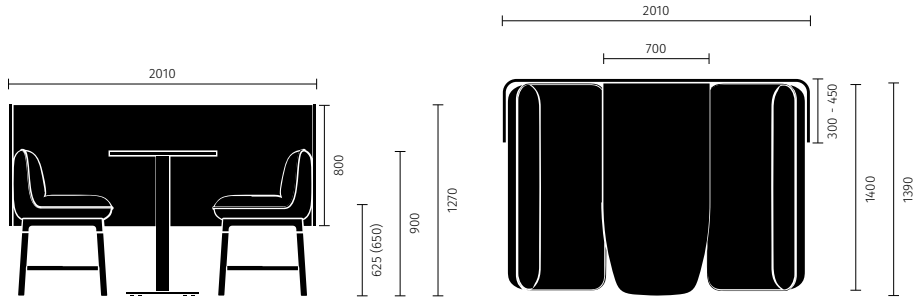

bar (seat height: 780 mm)

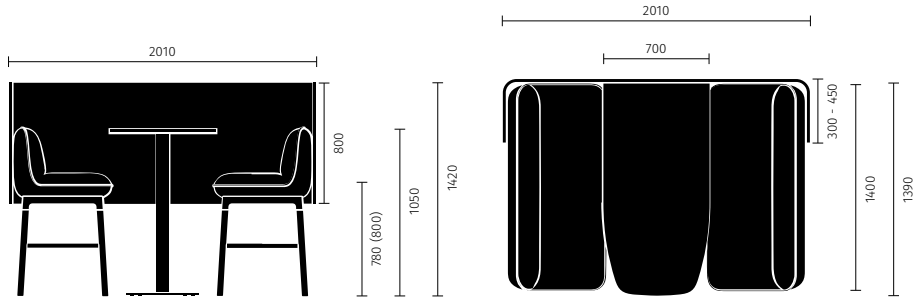

Colours

Diner screen, upholstery covers Further options

Cream · Yellow green · Light blue · Mid blue · Yellow orange · Beige cognac · Brown-violet · Dark grey melange · Carbon · Pale grey

Diner table frame

Black · Clear white · Fjord green · Cayenne red · Sand beige · Deep green · Bronze dark

Diner table top Further options

Clear white · Arctic white · Sand beige · Antique pink · Fjord green · Stone grey · Ash light · Walnut smooth · Oak wenge varnish

Solid wood frame

Beech natural · Beech black · Ash on natural oak, stained

Steel frame

Black · Clear white · Chromed · Fjord green · Cayenne red · Sand beige · Deep green · Bronze dark

---

More about se:café high diner

Website
CAD data

se:café bench

Fully upholstered bench seat for cosy comfort

se:café bench is a fully upholstered bench without armrests and backrests that is perfect for open and dynamic working environments. It promotes flexibility and freedom of movement, whether in work cafés, lounges or intermediate areas. The homely design, combined with clear lines and elegant decorative stitching, creates a timeless appearance. Thanks to the variety of options, the bench can be customised to many interior concepts. Its thoughtful design encourages quick breaks or impromptu discussions, perfectly complementing any modern office design.

Advantages

- se:café bench impresses with its attractive appearance.
- The comfortable upholstery creates a cosy and welcoming feel.
- The bench is suitable for many different applications.

Features

- This is a fully upholstered bench without a backrest.
- The look is reminiscent of restaurant or café furniture (American diner).
- The seat height is 450 mm and the seat width is 1600 mm.
- se:café bench has a simple plug-in and screw system for mounting and linking individual parts.
- Clear, organic and flowing lines characterise the bench.
- As it does not have a backrest, se:café bench is ideal for casual sitting.

Options/accessories

- Two base frame variants are available: wood and steel.
- With the bench version, the two upholstery covers for the top and bottom seat cushions can be configured independently of each other.
- The Sedus fabric collections, as well as leather and imitation leather, are available. Note: Colour combinations are possible within a fabric collection. Leather and imitation leather can be combined with each other and with all fabric collections.
- It is possible to replace individual parts at a later date.

Dimensions (all dimensions in mm)

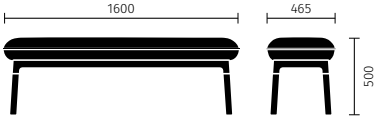

Colours

Upholstery covers Further options

Cream · Yellow green · Light blue · Mid blue · Yellow orange · Beige cognac · Brown-violet · Dark grey melange · Carbon · Pale grey

Solid wood frame

Beech natural · Beech black · Ash on natural oak, stained

Steel frame

Black · Clear white · Chromed · Fjord green · Cayenne red · Sand beige · Deep green · Bronze dark

---

More about se:café bench

Website
CAD data

sedustainable

se:café bench is sustainable.

Social responsibility
- Intuitive high sitting encourages movement and changes in posture.
- se:café bench increases well-being.

Economy
- The different versions are suitable for many applications and situations.

Ecology
- Individual parts can be exchanged at a later date.
- The foams used are CFC-free.

Sedus pursues a holistic approach to sustainability based on the three pillars of social, ecology and economy. The goal of becoming CO_2-neutral at its administrative and production sites by 2025 is actively supported through the development of innovative products and efficient production methods. Sedus is also committed to social projects, education and health through two foundations to which the company is majority-owned, thus making a positive contribution to society. With the “Sedustainable” initiative, Sedus designs holistic workplace solutions that both protect the planet and improve the quality of life of its employees. We really care.

We really care

womanpower

Designed, engineered, crafted **in Germany. Since 1871.**

Further information and all downloads are available at
sedus.com/en/products/chairs/secafe-bench

84.0622.212 · Status 06/08/2025 · Subject to change without notice · Sedus Stoll AG · www.sedus.com